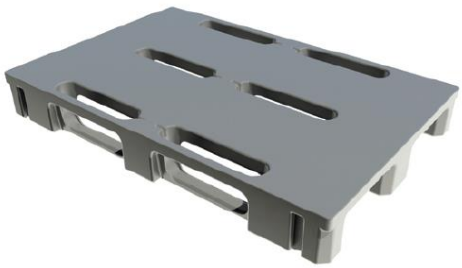

Product specification Grey Full-size pallet

Materiel:	Polyethylene with friction surface and steel reinforcement
Environment	100 % reusable material
Working temperature range:	-35° C to +40° C
Format:	1200 * 800 mm
Height:	150 mm
Tolerances:	See drawing below
Weight	14,8 kg ± 2 %
Loading capacity:	1000 kg
RFID:	2 pcs. UHF Gen2. (See drawing for locations)
EAN:	No
Number of products/module:	17 pcs.
SRS Part number:	17 Full-Size Pallet Grey: 7 000 902 17 Full-Size Pallet Grey washed: 7 000 904

Dimensions

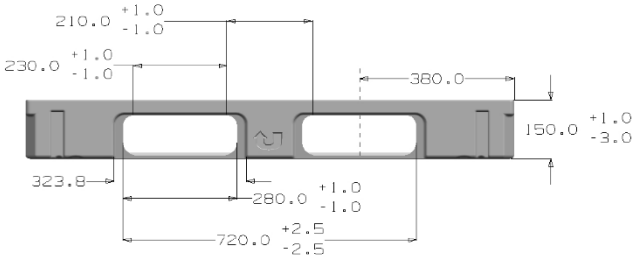

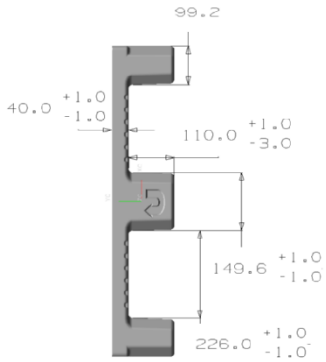

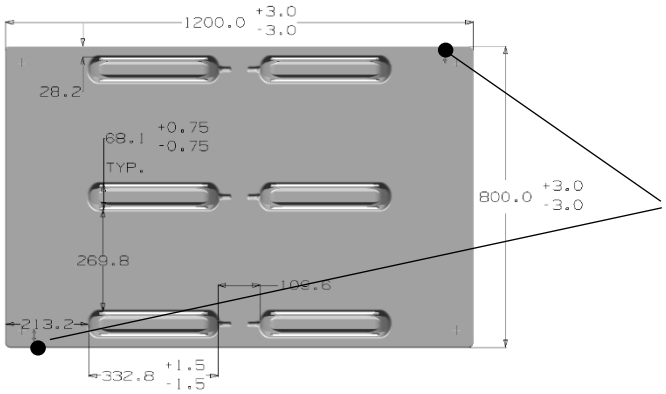

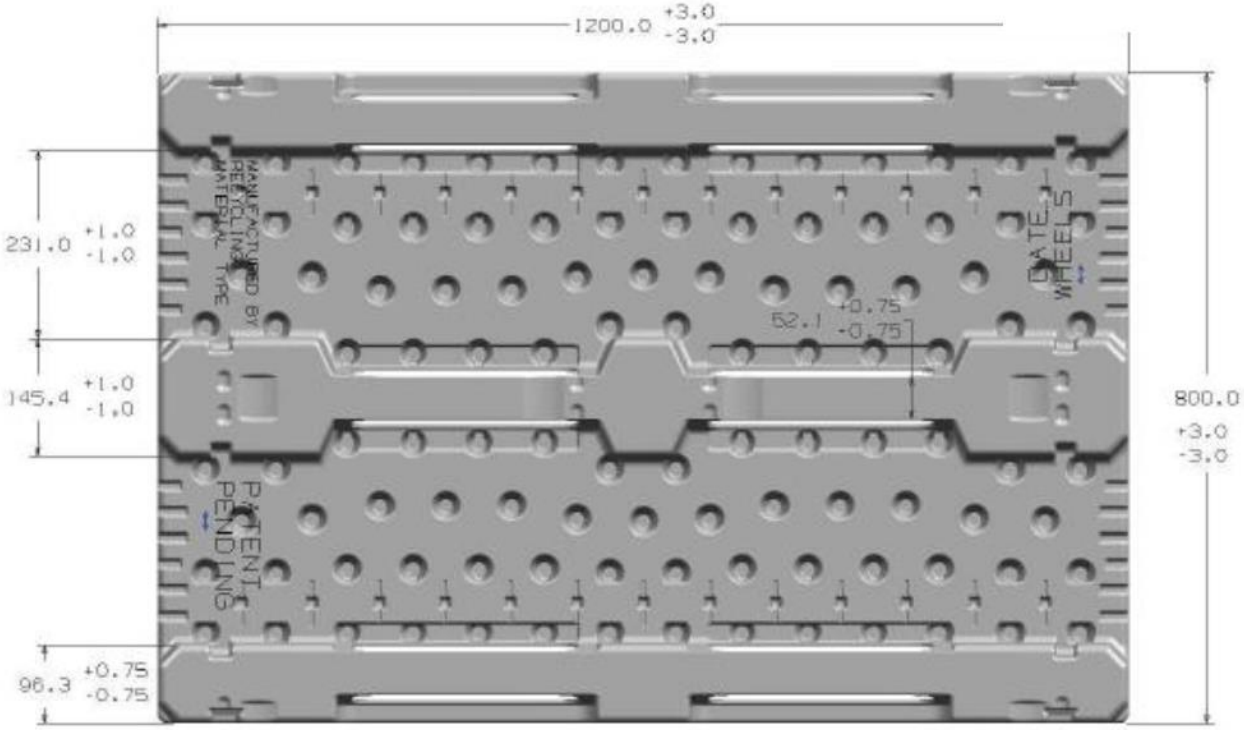
1200.0 +3.0 -3.0
231.0 +1.0 -1.0
145.4 +1.0 -1.0
96.3 +0.75 -0.75
52.1 +0.75 -0.75
800.0 +3.0 -3.0
MANUFACTURED BY
RETYCLING
MATERIAL TYPE
DATE
WHEELS
PATENT
PENDING